for PDF - 320209-M (List 40090 Entry 1732)

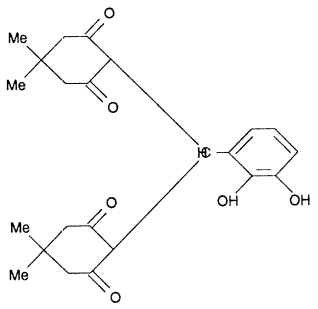

- ***Chemical Data***

CAS Registry No.	**MW**	**Molecular Formula**
	400	C23H28O6

- ***CNAM Chemical Names***